SECTIONAL VIEW –INFINITY Model 3660 TYPE 3

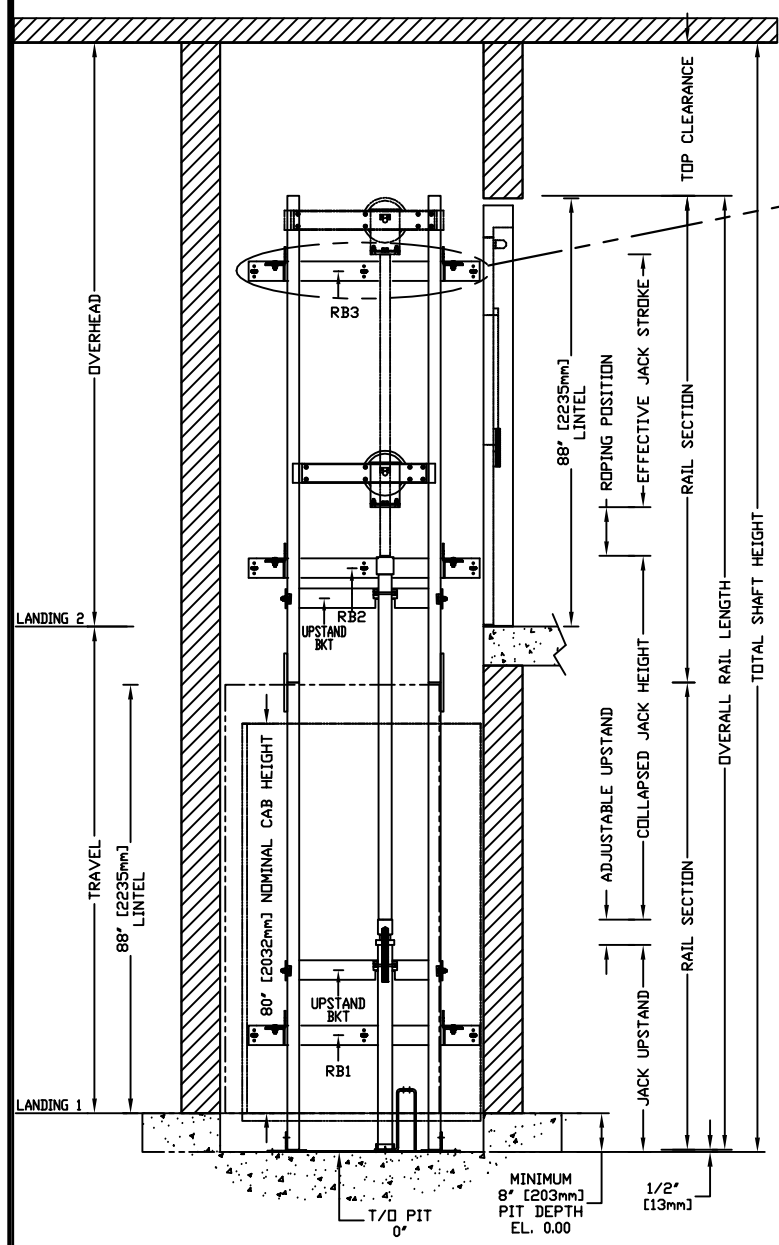

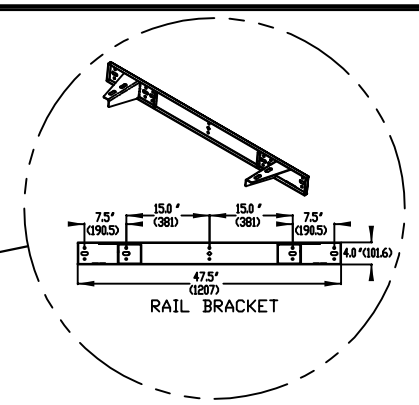

RAIL FORCES	
✱R1	✱R2
304lbf.	194lbf.
RAIL WEIGHT : 8.0 lbs / ft	

R3 NOTE:
PIT FLOOR TO SUPPORT LOAD OF: 5.6Kips ✱(INCLUDES IMPACT)

FOR TOTAL PULL-OUT FORCE ON RAIL BRACKET, R1 MUST BE DOUBLED eg.

RAIL BRACKET

PLAN VIEW – INFINITY Model 3660 TYPE 3

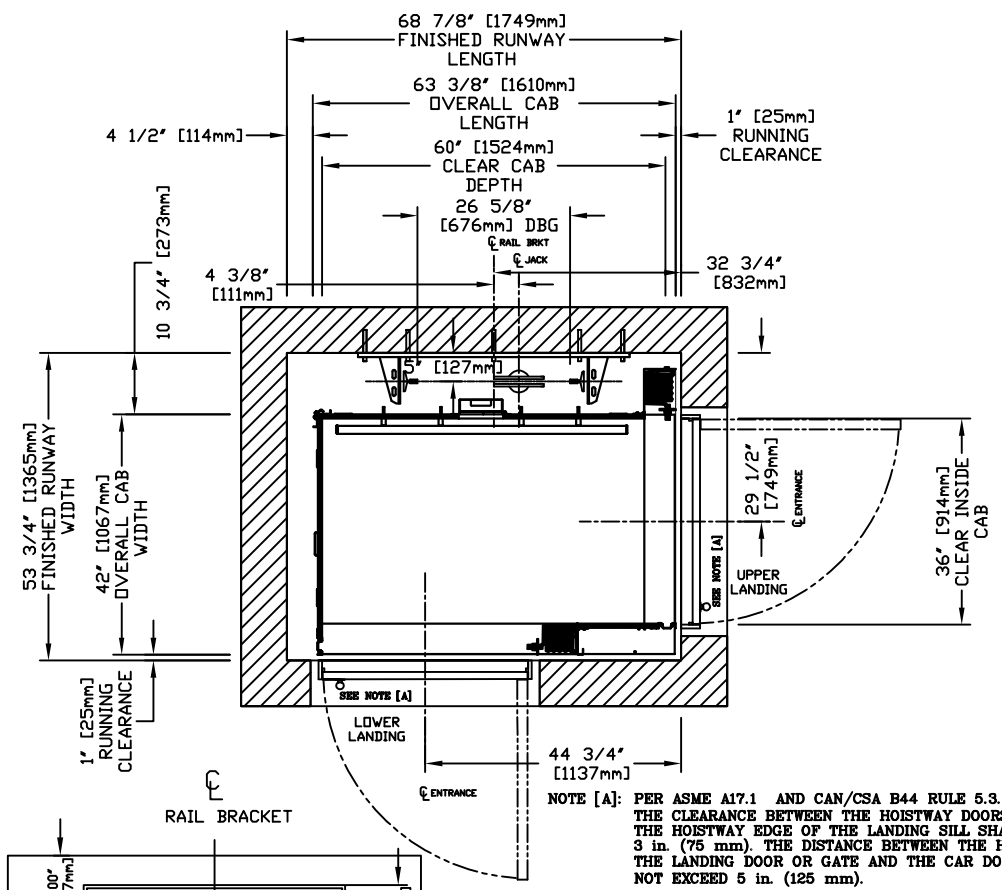

NOTE [A]: PER ASME A17.1 AND CAN/CSA B44 RULE 5.3.1.7.2 THE CLEARANCE BETWEEN THE HOISTWAY DOORS OR GATES AND THE HOISTWAY EDGE OF THE LANDING SILL SHALL NOT EXCEED 3 in. (75 mm). THE DISTANCE BETWEEN THE HOISTWAY FACE OF THE LANDING DOOR OR GATE AND THE CAR DOOR OR GATE SHALL NOT EXCEED 5 in. (125 mm).

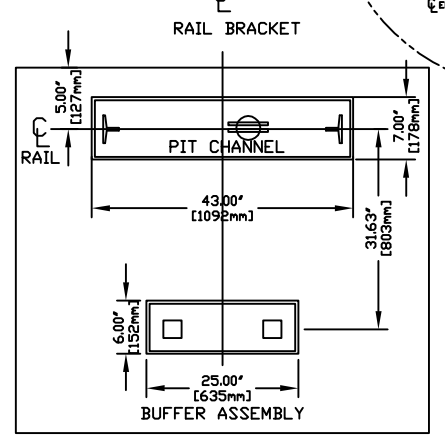

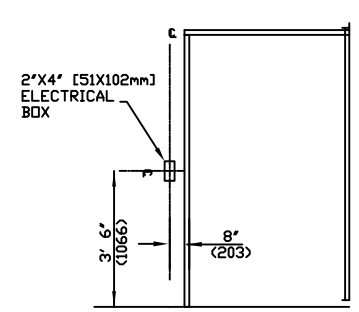

HALL FIXTURE LOCATION
LEFT HAND AS SHOWN
RIGHT HAND OPPOSITE
1. HALL BUTTON AT ALL FLOORS

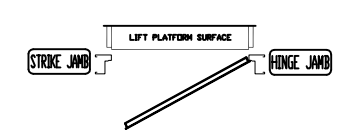

LEFT HAND SWING

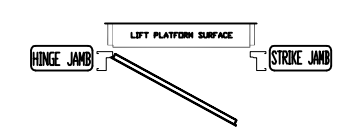

RIGHT HAND SWING

	AT TOP OF HOISTWAY CONSULT YOUR CONCORD REPRESENTATIVE FOR EXACT LOCATION
TOP RAIL BRACKET RB3	
INTERMEDIATE RAIL BRACKET RB2	96"[2438mm] INTERVALS ABOVE BOTTOM BRACKET
BOTTOM RAIL BRACKET RB1	24" [610mm] ABOVE PIT FLOOR

FLOOR No. REAR	FLOOR No. FRONT	FLOOR HEIGHT
TOTAL RISE		

PIT / OVERHEAD REQUIREMENTS			
MAX. SPEED (ft/min)	MIN. PIT	TOTAL TRAVEL	MINIMUM OVERHEAD
36	8" ***		92"(2337)

*** NOTE: Additional pit equipment required when over 36" [914.4mm] deep , consult your local dealer for details

DOCUMENT REVISION 001, DATE: 04/26/07

PROVISIONS BY OTHERS

✱GENERAL

HOISTWAY- THE HOISTWAY MUST BE IN ACCORDANCE WITH "SAFETY CODE FOR ELEVATORS" (B44 SECTION 5.3), "SAFETY CODE FOR ELEVATORS AND ESCALATORS" (ASME A17.1) AND ALL STATE/PROVINCIAL AND LOCAL CODES.

PLUMB HOISTWAY- DUE TO CLOSE RUNNING CLEARANCES OWNER/AGENT MUST ENSURE THAT HOISTWAY AND PIT (WHERE PROVIDED) ARE LEVEL, PLUMB AND SQUARE AND ARE IN ACCORDANCE WITH THE DIMENSIONS ON THESE DRAWINGS.

MINIMUM OVERHEAD CLEARANCE- OWNER/AGENT MUST ENSURE MINIMUM OVERHEAD CLEARANCE IS IN COMPLIANCE WITH CODES.

CONSTRUCTION SITE- OWNER/AGENT TO PROVIDE ALL MASONRY, CARPENTRY AND DRYWALL WORK AS REQUIRED AND SHALL PATCH AND MAKE GOOD (INCLUDING FINISH PAINTING) ALL AREAS WHERE WALLS/FLOORS MAY REQUIRE TO BE CUT, DRILLED OR ALTERED IN ANY WAY TO PERMIT THE PROPER INSTALLATION OF THE LIFT.

DIMENSIONS
CONTRACTOR/CUSTOMER TO VERIFY ALL DIMENSIONS AND REPORT ANY DISCREPANCIES TO OUR OFFICE IMMEDIATELY.

✱STRUCTURAL

FLOOR/SUPPORT WALL LOADS- STRUCTURAL ENGINEER TO ASSURE THAT BUILDING AND SHAFT WILL SAFELY SUPPORT ALL LOADS IMPOSED BY THE LIFT EQUIPMENT. REFER TO THE TABLES ON THIS DRAWING FOR LOADS IMPOSED BY THE EQUIPMENT.

WHERE DOORS ARE REQUIRED- SUITABLE LINTELS MUST BE PROVIDED BY OWNER/AGENT. DOOR FRAMES ARE NOT DESIGNED TO SUPPORT OVERHEAD WALL LOADS.

✱MACHINE ROOM

LOCATION / ACCESS- MACHINE ROOM LOCATED AT THE LOWEST LEVEL ADJACENT TO HOISTWAY, UNLESS SHOWN OTHERWISE ON THE LAYOUT DRAWINGS. FIELD ADJUSTMENT BY INSTALLER MAY BE NECESSARY TO MEET JOB SITE CONDITIONS OR REGULATIONS. ACCESS TO MACHINE ROOM TO BE THROUGH A SELF CLOSING LOCKING DOOR.

SLEEVES FOR OIL & ELECTRIC LINES- FROM MACHINE ROOM TO RUNWAY AS REQUIRED. (POSITION PER INSTALLERS INSTRUCTIONS).

	INPUT VOLTAGE (V/PH/CYCLE)	DISCONNECT SIZE (AMPS)	TIME DELAY FUSE (AMPS)	FULL LOAD CURRENT (AMPS)
MOTOR INFO		30	20	10.6
		60	30	17.0
CAB LIGHTS	115/1PH		15	

✱ELECTRICAL

POWER SUPPLY- (SEE SPECIFICATIONS) LOCKABLE FUSED DISCONNECT WITH AUXILIARY CONTACT TO BREAK THE BATTERY FEED, OR CIRCUIT BREAKERS WITH A 3-POLE BREAKER FOR BATTERY FEED REQUIRED, IN COMPLIANCE WITH ELECTRICAL CODE, AS FOLLOWS: (LOCATED ON WALL ON LOCK JAMB SIDE OF MACHINE ROOM DOOR)

PERMANENT POWER- BEFORE INSTALLATION CAN BEGIN, PERMANENT POWER MUST BE SUPPLIED.

LIGHTING- OWNER/AGENT TO ENSURE AT LEAST 5 FTC OR 54 LUX AMBIENT LIGHTING OVER LIFT AREA.

✱ENTRANCES

FASCIA PANEL BELOW UPPER LEVEL ENTRANCE- WHERE REQUIRED, FASCIA PANEL MUST BE FASTENED TO A SOLID WALL AND BE PERPENDICULAR TO THE FLOOR AND WALLS. HOISTWAY FASCIA IS NOT SELF-SUPPORTING FOR LONG, CONTINUOUS RUNS VOID OF ENTRANCES. ADEQUATE SUPPORT FOR THE FASCIA MUST BE PROVIDED.

ENTRANCE ASSEMBLIES- ENTRANCE ASSEMBLIES MUST BE ADJUSTED TO ALIGN WITH PLATFORM AND INTERLOCK EQUIPMENT. OTHERS TO ALLOW AN ADEQUATE ROUGH OPENING.

RETURN WALLS- RETURN WALLS AT ENTRANCES MUST BE BUILT-IN BY OTHERS AFTER ENTRANCE ASSEMBLIES ARE IN PLACE. ENTRANCE ASSEMBLY MUST BE SECURELY FASTENED TO WALLS BY ELEVATOR CONTRACTOR.

NOTE B
ALL INFORMATION IS SUBJECT TO CHANGE.
PLEASE REFERENCE OUR ON-LINE DRAWINGS AT www.concordelevator.com FOR THE MOST RECENT UPDATES

RESIDENTIAL ELEVATOR
INFINITY MODEL 3660 TYPE 3

CUSTOMER:	DATE:	THE INFORMATION DISCLOSED HEREIN IS THE EXCLUSIVE PROPERTY OF savaria™ AND MAY NOT BE USED BY OTHERS WITHOUT PRIOR WRITTEN CONSENT
PROJECT:	REVISION DATE:	
LOCATION:	COMPLETED BY:	

SHEET 0